Swift GPI

Directory

Frequently Asked Questions

This document describes frequently asked questions about SWIFT gpi Directory.

11 July 2019

Link to this document: https://www2.swift.com/go/book/bookext050646

Table of Contents

Preface 4

1 Directory Publication 5

1.1 What is the gpi Directory? 5

1.2 How Often Are the Directories Updated? 5

1.3 When Are the Directories Published? 5

1.4 How Are the Updates Organised into Files? 5

1.5 Where Can I Find the Definitions of the Data Fields? 6

2 Obtaining the Directory 7

2.1 How Do I Access the Directory? 7

2.2 Is the gpi Directory Available for All SWIFT Customers? 7

2.3 Do I Have to Pay for the Directory? 7

2.4 As a gpi Subscriber, Will My Institution Immediately Appear in the gpi Directory? 7

2.5 Documentation Resources with Respect to the gpi Directory and Supporting Information 8

3 Data Collection 9

3.1 When I Join gpi as a New Participant, Will I Be Able to Define How I Can Be Reached? 9

3.2 Who Is Collecting the Data? 9

3.3 Am I Visible to the gpi Community as a gpi Bank Solely Through Inclusion in the gpi Directory? 9

3.4 Do I Have to Encrypt my Data when I Submit it to SWIFT for the gpi T&T? 9

3.5 What is the Deadline to Populate the gpi Directory with Active Entries? 10

3.6 How Should I Specify in the Directory that All or Many of my 11-Character BIC Branch Identifiers Are Reachable for gpi? 10

3.7 Can I Specify in the Directory that I Am Sending out gpi Messages only and not Receiving them? 10

3.8 Why Should I Declare Myself as INTERMEDIARY? 10

3.9 How Can I Specify How I Can Be Reached? 10

3.10 Can I Use a BIC as Intermediary for my Branch BICs without Declaring it as an Intermediary? 11

3.11 Can I Specify Another Participant as my gpi Intermediary without the Other Participant Agreeing to it? 11

3.12 What does ACTS AS INTERMEDIARY = "Y" Mean Precisely? 11

3.13 Can I Specify Multiple Correspondents (INTERMEDIARIES) for the same Currency? 12

3.14 How Should I Specify that I am an Indirect Participant of a Payment Market Infrastructure (PMI)? 12

3.15 What Does it Mean if a Participant Declares its BIC as REACHABLE THROUGH a PMI and Flags ACTS AS INTERMEDIARY = "Y"? 12

3.16 What Happens if a Participant BIC Changes the ACT AS INTERMEDIARY from Y to N? 12

3.17 How Do I Specify that I Can Receive gpi Payments from Every Participant that I Have RMA Relationships with? 13

3.18 Which Payment Market Infrastructures (PMIs) Are Considered Valid for gpi? 13

3.19 I Know a Particular Counterparty is Live on gpi, but Cannot Find the Relevant Entry in the gpi Directory? 13

4 Directory Usage 14

4.1 Will the gpi Reference Data for Routing Contradict my own Internal Routing Rules? 14

4.2 As a gpi Subscriber, What Are the Benefits of the gpi Directory? 14

4.3 As a Bank, is it Mandatory to Implement the gpi Directory? 14

4.4 What Are the Benefits to Using a Daily Update of the Directory Versus the Monthly File? 14

4.5 Are the Contents of the gpi Directory Needed to Implement gpi Logic from the Rulebook Requirements? 15

4.6 Could You Provide a gpi Directory Example of an End-to-End Routing Path that Includes a Local Clearing System? 15

4.7 Could You Provide a gpi Directory Example Involving a Currency Exchange? 17

Legal Notices 18

Preface

About this document

This document describes frequently asked questions about SWIFT gpi Directory.

Intended audience

This document is for the following audience:

- SWIFT gpi Customers

Significant changes

The following tables list all significant changes to the content of the *Directory for SWIFT gpi Frequently Asked Questions* since the 02 June 2017 edition. These tables do not include editorial changes that SWIFT makes to improve the usability and comprehension of the document.

New information
Is the gpi Directory Available for All SWIFT Customers? on page 7
As a gpi Subscriber, Will My Institution Immediately Appear in the gpi Directory? on page 7
Am I Visible to the gpi Community as a gpi Bank Solely Through Inclusion in the gpi Directory? on page 9
What is the Deadline to Populate the gpi Directory with Active Entries? on page 10
I Know a Particular Counterparty is Live on gpi, but Cannot Find the Relevant Entry in the gpi Directory? on page 13
As a gpi Subscriber, What Are the Benefits of the gpi Directory? on page 14
As a Bank, is it Mandatory to Implement the gpi Directory? on page 14
What Are the Benefits to Using a Daily Update of the Directory Versus the Monthly File? on page 14
Are the Contents of the gpi Directory Needed to Implement gpi Logic from the Rulebook Requirements? on page 15

Updated information	Location
Updated content to reflect the current information about the SWIFT gpi Directory	Globally throughout the document

Deleted information
Should I Use the SWIFTRef Reach Plus Directory or the gpi Directory?
Does the Field RECORD OWNER Have to Match the PARTICIPANT ID when Submitting DATA?

Related documentation

- Swift General Terms and Conditions
- Swift GPI Service Description
- Swift GPI Rulebook for Mandatory Services - GPI Customer Credit Transfer and GPI Cover Payments
- Swift GPI Annex for Clearing and Settlement through Payments Market Infrastructures
- Directory for Swift GPI Technical Specifications
- Swift GPI Operations Guide

1 Directory Publication

1.1 What is the gpi Directory?

Swift GPI members must publish gpi capabilities in the gpi Directory. This details under which conditions (that is, currency, channel, cut-off times) banks (listed by 8-character BIC) can send and receive gpi payments. It outlines whether or not a bank acts as an intermediary for gpi payments. This reference data can be used to calculate the optimal payment route. There are two directories that contain gpi data:

- The gpi Directory - a directory that contains the gpi production (live) data.
- The Test & Training (T&T) gpi Directory - a directory that contains the data for the gpi Test and Training participants. The format and delivery channels for the T&T directory are different than the live Directory and are not considered by the gpi Tracker (that is, delegation and cut-off times).

1.2 How Often Are the Directories Updated?

Updates to the gpi Directory are reflected in monthly and daily updates. gpi members will be able to choose the update cycle and are subscribed by default.

Updates to the T&T gpi Directory are sent out weekly if there is an update. Otherwise, it is sent out monthly.

1.3 When Are the Directories Published?

The T&T gpi directory is published every Friday, but only in case there are changes relative to the previous publication.

The gpi Directory (with monthly updates) is published every last Friday of the month.

The gpi Directory with daily updates are published as a delta file every day, approximately at 02:00 GMT. The daily delta files are also sent if there are no updates. They are empty in that case.

For more information, see the Reference Data Publication Schedule and Distribution Information.

1.4 How Are the Updates Organised into Files?

The T&T gpi directory is sent as a full file. No delta (difference) files are used.

In the monthly updated gpi Directory, the data is distributed as a full file once a month and as a delta file once a month, on the same day.

In the daily updated gpi Directory, the data is distributed as a full file once a month and as a delta file every day. The delta file only contains the changes from the previous day and is published one day after the monthly updated directories.

Future records (data records that will become valid as of a certain date) can be collected from participants without immediately being published. In the daily updated directories, future records are only published at the start date itself. In the monthly updated directories, the future records are published if they become valid within the month following the monthly publication.

Similarly, records that will cease being valid will be removed from the published files in the next publication after the end date.

For more information, see the Reference Data Publication Schedule and Distribution Information.

1.5 Where Can I Find the Definitions of the Data Fields?

You can find the definitions of the data fields in the technical specifications.

For more information, see the Directory for Swift GPI Technical Specifications.

2 Obtaining the Directory

2.1 How Do I Access the Directory?

SWIFT (swiftrefdata@swift.com) sends the T&T gpi Directory weekly by email to all participants. You can request the T&T Directory at this address.

By default, SWIFT subscribes the pilot and live participants to the distribution of the monthly updated gpi Directory. Participants must order through SWIFT ordering to receive the directories over FileAct or to receive the daily updates, or both.

The gpi Directory is available as a zip package with the following features:
- manually downloadable from the SWIFTRef portal (www.swiftrefdata.com)
- automatically downloadable from the SWIFTRef portal through a web service
  For more information, see the SwiftRef Automated Download Service Technical Specifications.
- sent by SWIFT through SWIFTNet FileAct
  For more information, see the Directories Over FileAct Implementation Guidelines.

For more information about the SWIFTRef portal, which is SWIFT's unique reference data and financial information utility, see the Reference Data Publication Schedule and Distribution Information and the Frequently Asked Questions for SWIFTRef Users.

2.2 Is the gpi Directory Available for All SWIFT Customers?

The gpi Directory is available only for Swift GPI customers that may use it for the sole purpose of using the gpi service.

2.3 Do I Have to Pay for the Directory?

Both the gpi Directory and the T&T gpi directory are included in the gpi service fee.

You do not have to pay to have the directory imported into your back-office applications.

An additional fee is applied for gpi Directory subscribers that pay for a daily update. An automated download option is provided by default for free.

2.4 As a gpi Subscriber, Will My Institution Immediately Appear in the gpi Directory?

gpi customers must meet the following readiness requirements before publication in the gpi Directory:
- completion of the bilateral testing phase with SWIFT
- adherence with the gpi business rules and technical specifications as defined in the Swift GPI Rulebook for Mandatory Services - GPI Customer Credit Transfer and GPI Cover Payments
- participation as both an instructing agent and an instructed agent
  (Participation as an intermediary agent is optional.)

- level of automation sufficient to meet the business rules and technical specifications as defined in the Swift GPI Rulebook for Mandatory Services - GPI Customer Credit Transfer and GPI Cover Payments
- declaration of a customer's gpi capabilities through the **Maintain Your Data** tool

The deadline to have your data published or updated in the next gpi Directory is indicated at the top of the **Maintain Your Data** tool or under the SWIFTRef Publication Schedule and Distribution Information.

For more information, see the Reference Data - Maintain Your Data User Guide.

2.5 Documentation Resources with Respect to the gpi Directory and Supporting Information

1. Reference Data Frequently Asked Questions - For SwiftRef Users
2. Reference Data Publication Schedule and Distribution Information
3. Directory for Swift GPI Technical Specifications
4. Directory for Swift GPI Sample Files
5. Directory for SWIFT gpi Schemas
6. Reference Data - Maintain Your Data User Guide

3 Data Collection

3.1 When I Join gpi as a New Participant, Will I Be Able to Define How I Can Be Reached?

Yes. When you join gpi, the data collection team will contact you and will provide you with the data collection template to fill in, will support you to complete the template, and will validate your data.

As a participant you will also receive access to the full gpi Directory containing the data on all other participants.

3.2 Who Is Collecting the Data?

The SWIFTRef data team collects the data for the T&T directory.

gpi customers must initially provide and subsequently maintain published gpi data through the gpi online data collection screens, **Maintain Your Data**. gpi customers must register to get access to the online screens (available on www.swiftrefdata.com). If gpi customers are not able to access the screens, then contact SWIFT Support. The data is published in the daily gpi Directory the day after changes have been made, depending on the start date of the respective records and in the next monthly gpi Directory (generally published on the last Friday of the month).

The SWIFTRef data team's email address is swiftrefdata@swift.com. Participants can address any data collection related questions to the team.

For more information, see the Reference Data - Maintain Your Data User Guide.

3.3 Am I Visible to the gpi Community as a gpi Bank Solely Through Inclusion in the gpi Directory?

Yes. The directory is conceived to provide information about gpi members and the related information.

If you join Swift GPI, then the collection team will contact you to collect the information. You must keep your data current through the **Maintain Your Data** tool.

For more information, see the Reference Data - Maintain Your Data User Guide.

3.4 Do I Have to Encrypt my Data when I Submit it to SWIFT for the gpi T&T?

No, however, SWIFT recommends to encrypt the data when compressing the Excel sheet and to send the compressed ZIP file and the encryption code in two separate e-mails to the data collection team.

3.5 What is the Deadline to Populate the gpi Directory with Active Entries?

The deadline to have your data published or updated in the next gpi Directory is indicated at the top of the **Maintain Your Data** tool or under the SWIFTRef Publication Schedule and Distribution Information.

For more information, see the Reference Data - Maintain Your Data User Guide.

3.6 How Should I Specify in the Directory that All or Many of my 11-Character BIC Branch Identifiers Are Reachable for gpi?

The **Maintain Your Data** application allows users to group a number of 11-character BICs into one BIC Group. The BIC Group can then be used in all record types (Direct Cover records, Market Infrastructure records, Intermediary records, and SSI records) as a replacement for multiple individual Owner BICs. This way, it is possible to define one record that is valid for numerous 11-character BICs.

For more information, see the Maintain Your Data User Guide.

3.7 Can I Specify in the Directory that I Am Sending out gpi Messages only and not Receiving them?

No, participants joining gpi must act as both instructed and instructing party, that is, must be able to receive gpi messages.

The entries in the directory point out which RECEIVED payments you are capable of processing gpi-wise.

3.8 Why Should I Declare Myself as INTERMEDIARY?

If you specify **Y** in the field ACTS AS INTERMEDIARY, then other gpi participants can specify your PARTICIPANT ID in the field REACHABLE THROUGH.

Otherwise, SWIFT will not publish their gpi rules using you as INTERMEDIARY.

3.9 How Can I Specify How I Can Be Reached?

For each currency, specify the REACHABLE THROUGH and CHANNEL TYPE parameters. You have the flowing options:

- A SWIFT FIN-based payment market infrastructure (CHANNEL TYPE = FIN-PMI), for example REACHABLE THROUGH = EBA.
  The full list of FIN service codes is published as a part of the gpi Directory Technical Specifications and in the SWIFT Application Service Providers (ASP) file. For more information, see the Business Codes - For BIC Directory 2018, BIC Plus and Bank Directory Plus.
- A non-SWIFT FIN based payment market infrastructure (CHANNEL TYPE = FIN-PMI), such as REACHABLE THROUGH = CHIPS.

If a NON-FIN-PMI requires bilateral relationships, then CHANNEL TYPE "D-C" and/or CHANNEL TYPE "INTERMEDIARY" should be used to indicate reachability of the NON-FIN-PMI.

- An intermediary (CHANNEL TYPE = INTERMEDIARY), and providing the BIC of the intermediary, for example REACHABLE THROUGH = CITIUS33XXX. This means that the intermediary holds your nostro account. You can only specify an INTERMEDIARY if the intermediary participant has declared itself as ACTS AS INTERMEDIARY = Y for the same currency.
- As Direct-Cover (CHANNEL TYPE = D-C), leaving the REACHABLE THROUGH empty. This means that you have a bilateral agreement and/or RMA in place for correspondent banking (a direct account relationship or a cover account for the currency) that can be used for gpi. In other words, your PARTICIPANT ID can be reached by any other bank that can send payments to that PARTICIPANT ID.

3.10 Can I Use a BIC as Intermediary for my Branch BICs without Declaring it as an Intermediary?

You do not have to explicitly state that a BIC acts as an intermediary to reach the 11-character BIC of the corresponding BICXXX because that is implicit in FIN.

It is not necessary to list the head-office BICXXX (for example VRBPIT2VXXX) as intermediary for its 11-character BIC branches (for example VRBPIT2VS31). For example: if a participant wants to make a payment to VRBPIT2VS31, the instructing participant only needs to find a route to VRBPIT2VS31 using the directory. VRBPIT2VS31 does not need to list that it is reachable through its head-office VRBPIT2VXXX, because if an MT 103 can be sent directly to VRBPIT2VXXX, then it can also be sent directly to VRBPIT2VS31, and vice versa. FIN guarantees this.

If a payment needs to be routed to VRBPIT2VS31 and the directory indicates that VRBPIT2VXXX is not listed as an INTERMEDIARY (or not listed at all), there is no issue.

3.11 Can I Specify Another Participant as my gpi Intermediary without the Other Participant Agreeing to it?

No. In general, if a participant declares itself as being reachable through an intermediary, SWIFT will check that this intermediary has listed itself as intermediary in the gpi Directory for the requested currency.

However, if a participant declares itself as being reachable through an intermediary in the future by specifying a future START DATE, SWIFT will wait with the validation until the time that the data needs to be published. It might be that, in the meantime, the intermediary participant has declared itself as intermediary.

3.12 What does ACTS AS INTERMEDIARY = "Y" Mean Precisely?

Two examples for illustration are provided below:

PARTICIPANT ID	PARTICIPANT NAME	CURRENCY	LOCAL TIME ZONE	ACTS AS INTERME-DIARY	REACHABLE THROUGH	CHANNEL TYPE
ABICGB22XXX	Abic Bank UK	USD	Europe/London	Y or N	ABICUS33XXX	INTERMEDIARY
ABICUS33XXX	Abic Bank US	USD	America/New York	Y		D-C

1. Line 2 specifies that ABICUS33XXX ACTS AS INTERMEDIARY for USD via direct or cover relationship. Line 2 specifies that ABICUS33XXX ACTS AS INTERMEDIARY for USD via direct or cover relationship.
2. Line 1 specifies that ABICGB22XXX is REACHABLE THROUGH ABICUS33XXX for USD as final beneficiary or as an intermediary.
3. Therefore, the instructing participant can send its payment to ABICUS33XXX (intermediary) knowing that it can reach ABICGB22XXX for USD.

3.13 Can I Specify Multiple Correspondents (INTERMEDIARIES) for the same Currency?

Yes, you can provide multiple records with different intermediaries for the same currency.

3.14 How Should I Specify that I am an Indirect Participant of a Payment Market Infrastructure (PMI)?

You cannot specify this explicitly. If you are indirectly reachable through a PMI, specify the BIC of the intermediary participant, that is a direct participant of the PMI.

Once this intermediary BIC declares itself as directly reachable through the PMI, you can be reached via the PMI indirectly.

3.15 What Does it Mean if a Participant Declares its BIC as REACHABLE THROUGH a PMI and Flags ACTS AS INTERMEDIARY = "Y"?

This means that the participant will forward payments to any other participant that also is a member of the PMI.

None of these other gpi participants have to declare explicitly that they are reachable through this intermediary.

3.16 What Happens if a Participant BIC Changes the ACT AS INTERMEDIARY from Y to N?

When this happens, other gpi participant's records specifying this participant as intermediary will become invalid and SWIFT will remove them from the directory. This will happen at the START DATE of the change, as specified by the intermediary participant.

SWIFT recommends that, prior to the change, the intermediary participant informs all its gpi counterparties so that they have the time to find replacement for the lost relationship and to specify a STOP DATE for the intermediary relationship in the directory in line with the START DATE of the change.

Currently, SWIFT will not provide a warning of such a change to the affected participants. In the future, the affected, invalid records will be flagged.

3.17 How Do I Specify that I Can Receive gpi Payments from Every Participant that I Have RMA Relationships with?

In an RMA relationship, a party has a direct account relationship or a cover account for the currency with its counter-party.

You can specify a bilateral RMA relationship, usable in gpi, as CHANNEL TYPE = **D-C** (Direct or Cover) and REACHABLE THROUGH empty.

3.18 Which Payment Market Infrastructures (PMIs) Are Considered Valid for gpi?

All FIN payment market infrastructures (PMIs) and NON-FIN-PMIs considered valid for gpi are listed in the **Maintain Your Data** tool under the **Market Infrastructure** tab.

SWIFT will ensure that all FIN-PMIs that are listed do apply RMA bypass on the PMI, that is, no RMA is required to allow exchange of MTs 103 between two members of the PMI. This gives the reader of the gpi Directory the assurance that MTs 103 can be exchanged between any two gpi participants that have declared themselves to be reachable through the same FIN-PMI.

For more information, see the Reference Data - Maintain Your Data User Guide.

3.19 I Know a Particular Counterparty is Live on gpi, but Cannot Find the Relevant Entry in the gpi Directory?

gpi members are entitled to have a listing in the gpi Directory. If you are aware of any exceptions, then contact SWIFTRef.SSI@swift.com. The SWIFTRef SSI team will take the necessary actions.

4 Directory Usage

4.1 Will the gpi Reference Data for Routing Contradict my own Internal Routing Rules?

The routing information provided by the gpi Directory supplements your other, non-gpi routing data.

4.2 As a gpi Subscriber, What Are the Benefits of the gpi Directory?

The gpi Directory is one of the components included with SWIFT gpi to improve the experience of cross-border payments.

The gpi Directory enables identification, routing, and monitoring.

Every gpi member bank will declare its gpi capabilities in the gpi Directory. This details which banks (listed by BIC) can send and receive gpi payments, in which currencies, through specified channels at specific cut-off times.

4.3 As a Bank, is it Mandatory to Implement the gpi Directory?

SWIFT provides the gpi Directory solely for gpi customers' information purposes.

gpi customers must initially provide and subsequently maintain published gpi data through the gpi online data collection screens (**Maintain Your Data**).

The directory is to be used to receive operational information regarding the applicable BICs, currencies, and cut-off times. The Directory is used by the Tracker and the Observer (the other two SWIFT gpi components) to determine if the receiver of the MT 103 is expected to process the payment per gpi rules. For non-FIN flows, the Directory is to be used by banks to inform the Tracker if the next bank in the payment transaction will process the payment per gpi rules.

For more information, see the Reference Data - Maintain Your Data User Guide.

4.4 What Are the Benefits to Using a Daily Update of the Directory Versus the Monthly File?

The benefit of the daily file versus the monthly file is that if there is an urgent data fix made throughout the month, participants already have the related update in one of the daily delta files and do not need to wait for the next monthly publication to fix the changed data. This decreases the risk of failed payments.

The daily and the monthly cycle files are not interchangeable.

An additional fee for the daily files applies, as specified in Do I Have to Pay for the Directory? on page 7.

For more information, see the SWIFTRef Publication Schedule and Distribution Information.

If you want to subscribe to a new delivery option (that is, add a daily publication), then you can do this through the SWIFTRef Distribution Options eform.

4.5 Are the Contents of the gpi Directory Needed to Implement gpi Logic from the Rulebook Requirements?

Yes. As described in the Swift GPI Rulebook for Mandatory Services - GPI Customer Credit Transfer and GPI Cover Payments, the gpi Directory is used for matching and validation purposes.

The gpi Directory is used by the Tracker and the Observer to determine if the receiver of the MT 103 is expected to process the payment per gpi rules.

4.6 Could You Provide a gpi Directory Example of an End-to-End Routing Path that Includes a Local Clearing System?

- To get the value or values for REACHABLE THROUGH, compare the REACHABLE THROUGH values that you get for field 57 and field 56 of the payment message and see if there is a shared value. If so, this indicates that the field 56 intermediary shares a PMI channel with the beneficiary field 57:
  1. Check field 57 BIC (PARTICIPANT ID) + CURRENCY + CHANNEL TYPE ="FIN-PMI" + START DATE & STOP DATE, to get the value or values for REACHABLE THROUGH.
  2. Compare these REACHABLE THROUGH values that you get for field 57 and field 56, and see if there is a shared value. If so, this indicates that the field 56 intermediary shares a PMI channel with the beneficiary field 57.
  3. Similarly, check field 56 BIC (PARTICIPANT ID) + CURRENCY + CHANNEL TYPE ="FIN-PMI" + START DATE & STOP DATE, to get the value or values for REACHABLE THROUGH.
  4. Compare the value or values from the two REACHABLE THROUGH fields and see if there is a match.
- Additionally further check if the field 56 agrees to be intermediary of the PMI:
  1. Check field 56 BIC (PARTICIPANT ID) + CURRENCY + ACTS AS INTERMEDIARY ="Y" + CHANNEL TYPE ="FIN-PMI" + START DATE & STOP DATE. If there is record, this BIC agrees to be the intermediary of the PMI.
- Strictly speaking, it is possible that multiple REACHABLE THROUGH values are found (multiple PMIs) for the same participant and currency. Though this is rare, it is possible, for example, for EUR, that there are two PMIs that could be listed in the gpi Directory, EURO1/ STEP1 (E1S1) and TARGET2.
- **Example one**

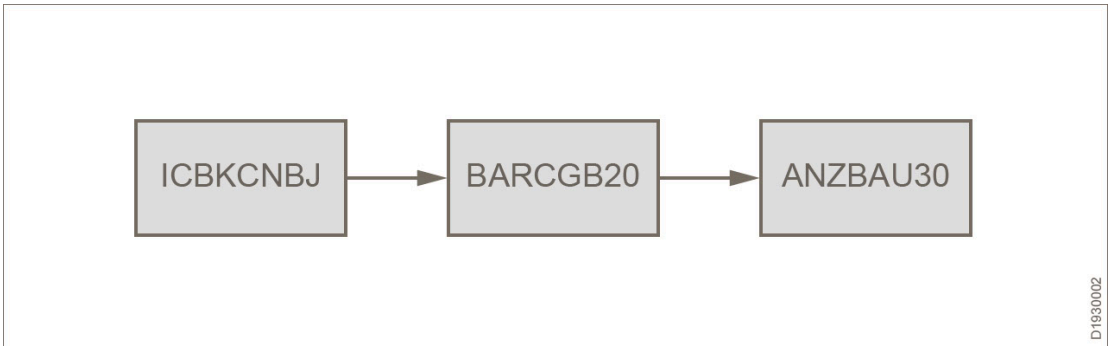

Sender: ICBKCNBJXXX

Receiver: BARCGB20XXX
Fields 32: GBP
Field 57: ANZBAU30XXX

1. If the payment message receiver BARCGB20XXX records itself as acting as intermediary (as per the last line of the example below), it means for CNY, CITI can be used to reach BARCGB20XXX that, as shown in the sheet, is also HKI participant.

PARTICIPANT ID	ID TYPE	PARTICIPANT NAME	COUNTRY	SERVICE ID	CURRENCY	CUT-OFF TIME	CUT-OFF DAY	LOCAL TIME ZONE	INTERMEDIARY	REACHABLE THROUGH	CHANNEL TYPE	START DATE	STOP DATE
ANZBAU30XXX	BIC	AUSTRALIA AND NEW ZEALAND BANKING GROUP LIMIT	AU	001	AUD	16:00+10:00		Australia/Sydney	Y		D-C		
ANZBAU30XXX	BIC	AUSTRALIA AND NEW ZEALAND BANKING GROUP LIMIT	AU	001	EUR	16:00+10:00		Australia/Sydney	N		D-C		
ANZBAU30XXX	BIC	AUSTRALIA AND NEW ZEALAND BANKING GROUP LIMIT	AU	001	GBP	16:00+10:00		Australia/Sydney	Y	BARCGB20XXX	INTERMEDIARY		
ANZBAU30XXX	BIC	AUSTRALIA AND NEW ZEALAND BANKING GROUP LIMIT	AU	001	USD	16:00+10:00		Australia/Sydney	Y	CHASUS30XXX	INTERMEDIARY		
BARCGB20XXX	BIC	BARCLAYS BANK PLC	GB	001	GBP	16:00+00:00		Europe/London	Y		D-C		
BARCGB20XXX	BIC	BARCLAYS BANK PLC	GB	001	EUR	16:00+00:00		Europe/London	Y	EBA	FIN-PMI		
BARCGB20XXX	BIC	BARCLAYS BANK PLC	GB	001	EUR	16:00+00:00		Europe/London	N	TGT	FIN-PMI		
BARCGB20XXX	BIC	BARCLAYS BANK PLC	GB	001	USD	16:00+00:00		Europe/London	Y	HKI	FIN-PMI	20160915	
BARCGB20XXX	BIC	BARCLAYS BANK PLC	GB	001	CNY	16:00+00:00		Europe/London	Y	HKI	FIN-PMI		
BARCGB20XXX	BIC	BARCLAYS BANK PLC	GB	001	CNY	16:00+00:00	D-1	Europe/London	Y	BKCHHKH0XXX	INTERMEDIARY		
BARCGB20XXX	BIC	BARCLAYS BANK PLC	GB	001	JPY	09:00+00:00	D-1	Europe/London	Y	SMBCJPJ0XXX	INTERMEDIARY		
BARCGB20XXX	BIC	BARCLAYS BANK PLC	GB	001	USD	16:00+00:00		Europe/London	Y	BARCUS30XXX	INTERMEDIARY		
BARCGB20XXX	BIC	BARCLAYS BANK PLC	GB	001	USD	16:00+00:00		Europe/London	Y	CITIUS30XXX	INTERMEDIARY		
BARCGB20XXX	BIC	BARCLAYS BANK PLC	GB	001	USD	16:00+00:00		Europe/London	Y		D-C		
CITIUS30XXX	BIC	CITIBANK N.A.	US	001	USD	15:00-05:00			Y		D-C	20160901	
CITIUS30XXX	BIC	CITIBANK N.A.	US	001	USD	15:00-05:00			Y		D-C		20160831
CITIUS30XXX	BIC	CITIBANK N.A.	US	001	CNY	15:00-05:00	D-1		Y	HKI	FIN-PMI		

2. Therefore the composition of the message and routing will be defined as:

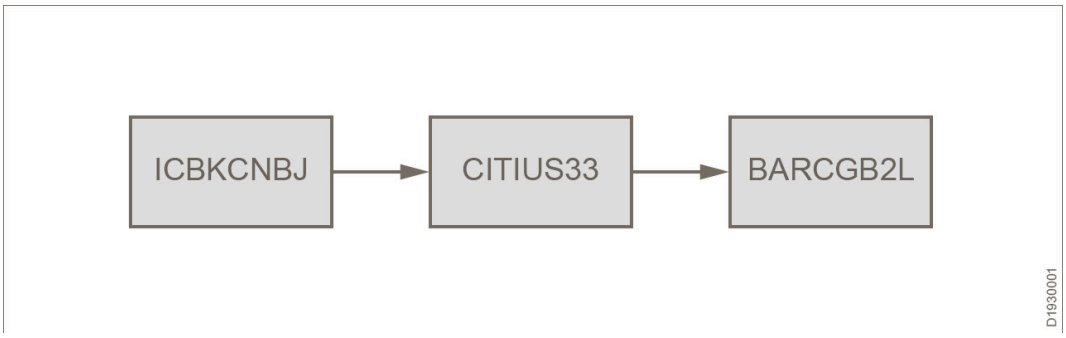

Sender: ICBKCNBJXXX
Receiver: CITIUS33XXX
Fields 32: CNY
Field 57: BARCGB2LXXX

- **Example two**

1. When it comes to EUR payment message, from the directory example in example one, BARCGB20XXX does not want to be an intermediary in TGT clearing system.

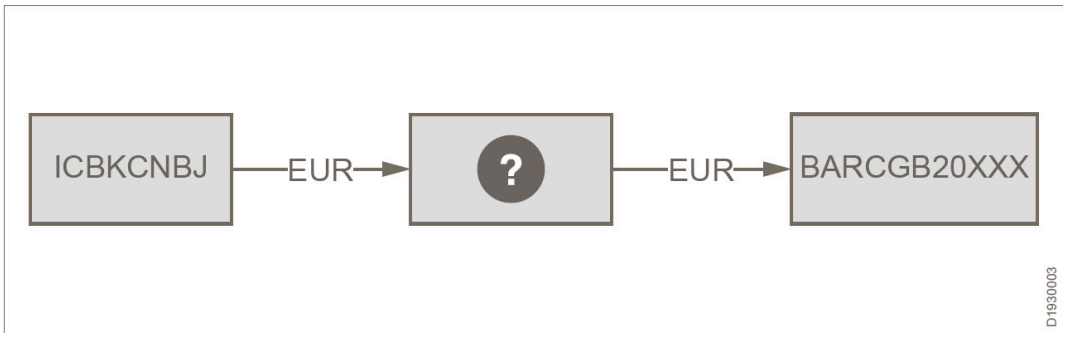

2. It means when you need to find from the gpi Directory an intermediary participant that is directly or indirectly reachable by ICBC, and is either of the following:
   a. listed by BARCGB20XXX as its intermediary for EUR
   b. declares intermediary = **Y** for EUR and TGT (or EBA), which means this participant agrees to be a EUR intermediary in TARGET2 (or EBA Euro1/Step1), and can reach BARCBG20XXX, since BARCGB20XXX is reachable over both TGT and EBA for EUR

3. "Indirectly" means that there is more than one gpi Intermediary involved, where only the first gpi Intermediary is directly reachable by ICBC, and the next gpi Intermediary is only reachable through the previous one. The last gpi Intermediary is then either 1) or 2).
4. BARCBG20XXX does not need to declare explicitly that CITIUS30XXX is its INTERMEDIARY for CNY, it is sufficient that BARCGB20XXX declares itself to be reachable over the same FIN-PMI for CNY as CITIUS30XX and that CITIUS30XXX declares itself to be an intermediary for this currency and FIN-PMI.

4.7 Could You Provide a gpi Directory Example Involving a Currency Exchange?

In the scenario below, bank (participant) A sends a gpi payment in CNY to participant B that performs FX exchange and then sends the exchanged USD gpi payment to participant C. If you want to make this payment, which look-ups are needed using the Directory?

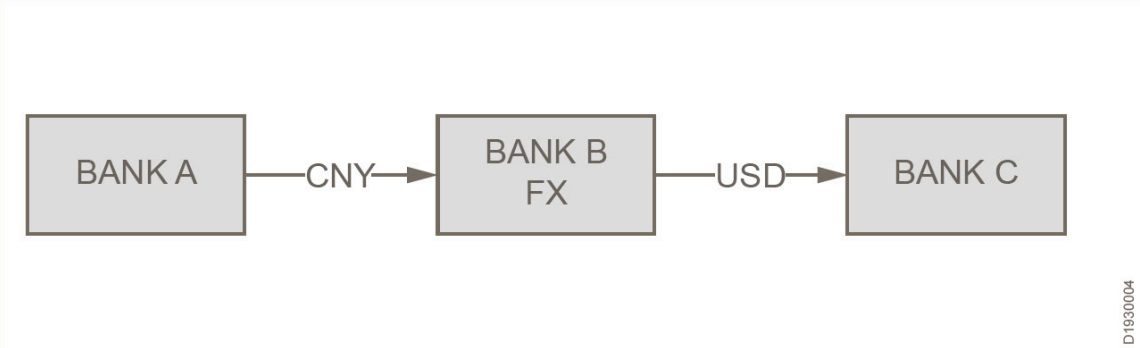

- We would expect that the gpi Directory for the case above would look like the following:

Participant ID	Currency	Cut-off time	Act as intermediary	Reachable through	Channel type
BANK B	CNY	16:00+08:00	Y		D-C
BANK C	CNY	16:00+08:00	Y or N	BANK B	INTERMEDIARY

- The lines above are all what bank A needs to determine if a full gpi route is available to bank C for CNY payments. bank A does not need to be aware in advance that B (or C, for that matter) will need to do a currency conversion to USD, prior to forwarding the payment to C, or prior to crediting the creditor. Bank A does not know in advance if a currency conversion will take place.
- This means:
  1. Bank B has declared itself reachable for CNY payments through D-C, and declares itself to be acting as an intermediary for CNY payments.
  2. Bank A knows it has a direct relationship with bank B, and knows it has no direct relationship with bank C (this is not visible from the gpi Directory).
  3. Bank C has declared itself to be reachable for CNY payments through bank B.
  4. Bank A sends the CNY payment to bank B, knowing from the gpi Directory that bank B will act as intermediary towards bank C for this currency.

Legal Notices

Copyright

Swift © 2025. All rights reserved.

Disclaimer

The information in this publication may change from time to time. You must always refer to the latest available version.

Translations

The English version of Swift documentation is the only official and binding version.

Trademarks

Swift is the trade name of S.W.I.F.T. SC. The following are registered trademarks of Swift: 3SKey, Innotribe, MyStandards, Sibos, Swift, SwiftNet, Swift Institute, the Standards Forum logo, the Swift logo, Swift GPI with logo, the Swift GPI logo, and UETR. Other product, service, or company names in this publication are trade names, trademarks, or registered trademarks of their respective owners.